AKI-0816.04

KNX Switch Actuator 8-channel, 8 SU MDRC, 16/20 A, 230 V AC, C-load, industry, 200 µF

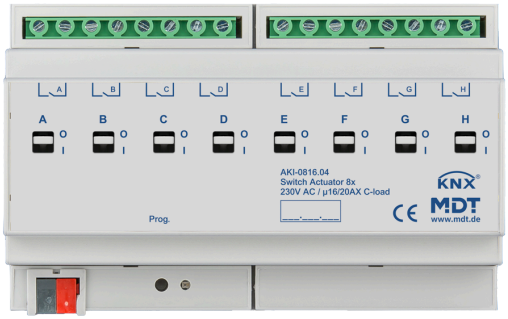

Product description:

The MDT Switch actuator AKI in industrial design for high to very high loads is used where high in-rush currents are expected. The actuator is equipped with bistable relays for currents up to 16/20 A and a C-load of up to 200 µF. Thanks to manual mechanical operation they are particularily suitable for sensitive areas. The channels are also switchable without Bus power and the relay status is always visible.

Product functions:

- **Comprehensive application**
- **Mechanical manual activation for immediate operation of the relay contact**
- Visible Status
- Normally open and normally closed
- Time functions (switch-on / switch-off delay)
- Comprehensive staircase lighting and pulse functions
- **Extended logic and scene function per channel**
- Extended status functions (inverted, cyclic, during locking)
- **Threshold switch (1 Byte/2 Byte/2 Byte float)**
- **Operating hours meter**
- **Priority/forced operation with automatic release time**
- **4 mm² connection terminals. Individual L-connections**
- Power supply over the KNX Bus
- Fast application download (long frame support as of ETS 5)

Technical data:

Device	Device type	AKI Switch Actuator
	Article Number	AKI-0816.04
	EAN / GTIN	4251916130176
	Installation width	8 SU / 144 mm
	Dimensions (H x W x D)	90 x 144 x 65 mm
	Weight, gross (incl. packaging)	0.549 kg
	Protection classification	IP20
	Installation type	MDRC, DIN rail 35 mm
	Installation position	any
	Weight, net	0.509 kg
	Mechanical manual override	Yes
Performance data	Nominal voltage U_n	230 V AC *1
	Nominal current I_n (per output)	16/20 A
	Nominal frequency	50/60 Hz
	Relay type	bistable
	Mech. switching frequency	1.000.000
	Capacitive load	200 µF / 16 A
	Fluorescent lamp load AX	≤ 20 AX
	Power dissipation of the device, typical	≤ 8 W
Outputs	Number of outputs	8
Lamp data	Incandescent lamp load	3680 W
	HV-Halogen lamps	3680 W
	NV-Halogen lamps	2000 W
	Fluorescent lamp uncompensated	3680 W
	Fluorescent lamp parallel compensation	2500 W
	Max. number of ECG	28
Currents	Inrush current (150 µs)	600 A
	Inrush current (600 µs)	300 A
	Total current carrying capacity of adjacent outputs	32 A
	Total current carrying capacity of the actuator	96 A
	Switching current 12/24 V AC	≥ 0,1 A
	Switching current 24 V DC	≤ 16 A
KNX	Nominal voltage KNX	30 V DC SELV
	Voltage range KNX	21 ... 31 V DC SELV
	Typical power consumption KNX bus	< 0,25 W
	KNX Medium	TP-256 with long frame support
	KNX Application	as of ETS 5 (latest)

Technical data:

Environmental conditions	Ambient operating temperature	0 ... 45 °C
	Storage	-20 ... +55 °C
	Humidity	< 95 %
	Condensation permissible	No

Connections	Connection type	Screw terminal with slotted head
	Conductor cross section 1 x	0,5 ... 4 mm²
	Screw terminal tightening torque	0.5 Nm
	KNX connection type	KNX terminal
	KNX cable cross section	0.6 ... 0.8 mm, solid conductor

Hinweise		Protection against induced voltage spikes: To protect against voltage spikes when switching off inductive loads, it is recommended to use appropriate protective circuits such as flyback diodes, RC networks, or varistors directly at the actuator output.

*1 Mixed operation of nominal and safety extra low voltage (SELV) within the actuator is not permitted!

Wiring diagram:

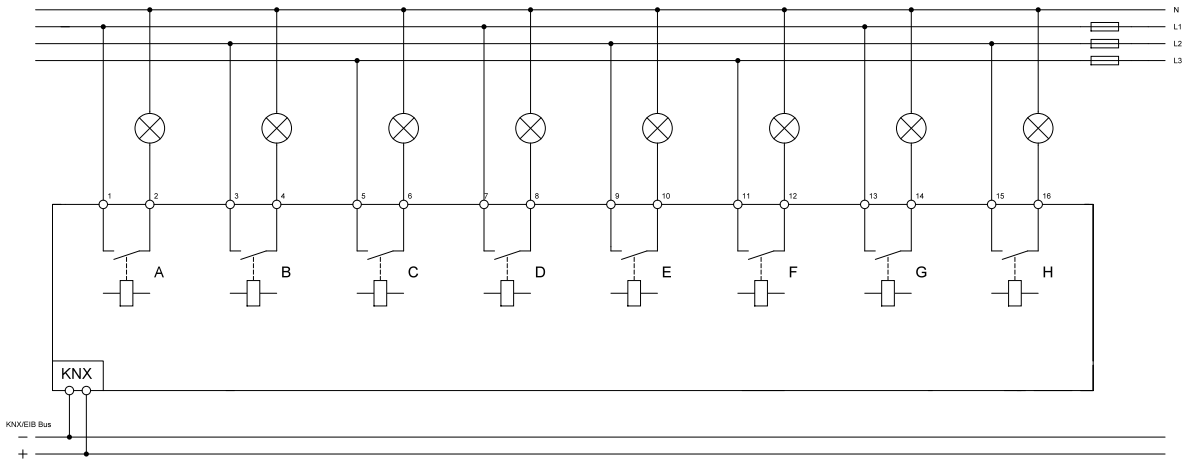

Technical modifications and corrections may be made without notice. Images may differ.